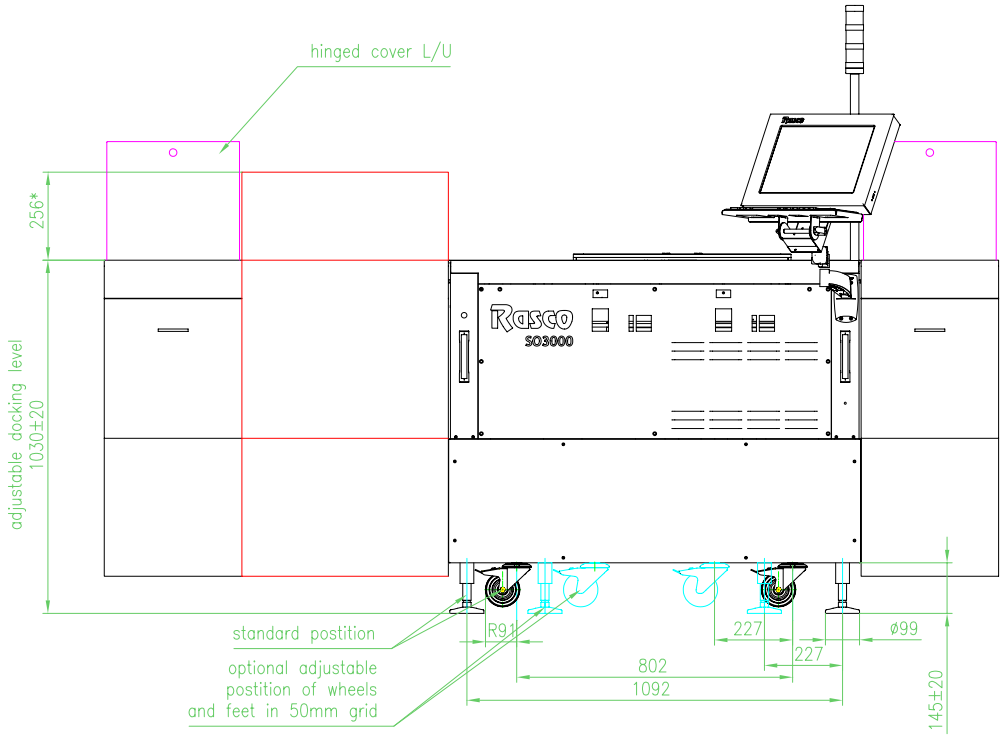

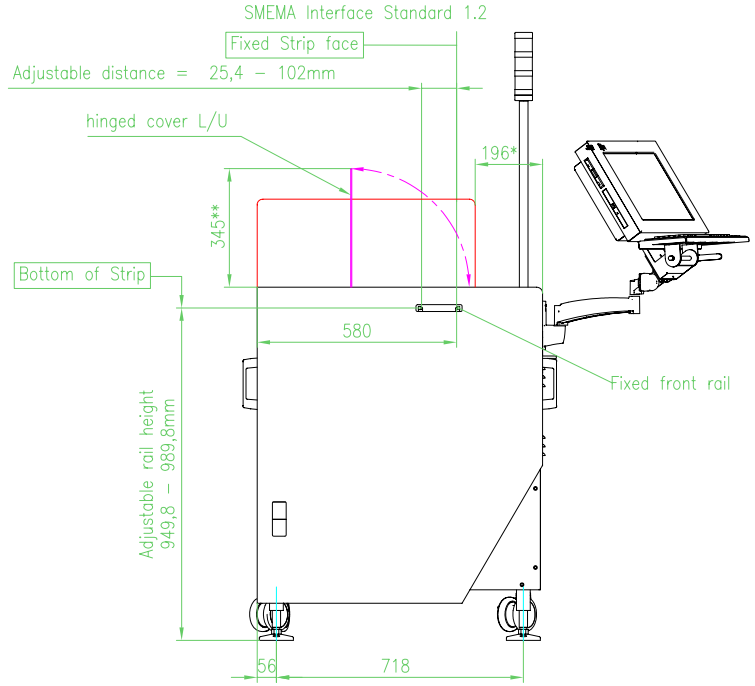

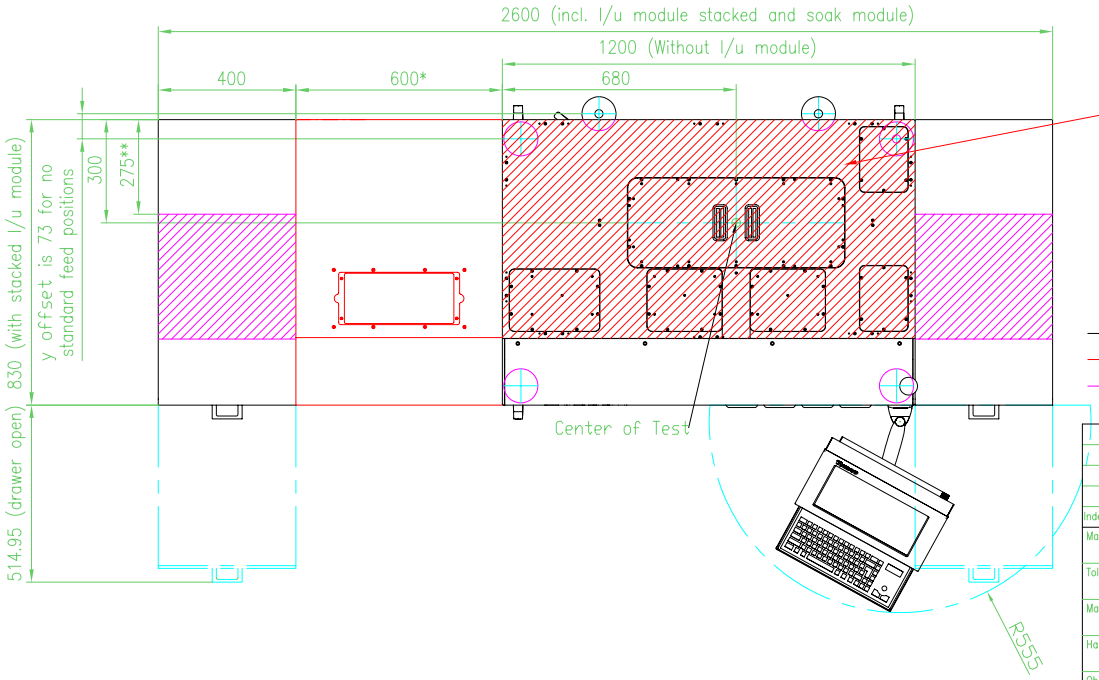

Handler footprint:
without operator interface
2,2sqm
with operator interface
2,8sqm

Dimensions for handler and stacked loader/unloader
*Dimensions for soak module
**Dimensions for top hinged cover L/U
(for jam clearing L/U))

company confidential !

This drawing and the information herin is the property of RASCO and is to be used in strict confidence. This drawing shall not be reproduced, copied, or given to any third party without express written permission from RASCO.

Index	Zustand	Datum	Name	Index	Zustand	Datum	Name	Index	Zustand	Datum	Name	Index	Zustand	Datum	Name

Maßstab 15:1/20:1		Datum	Name
	Bearb.	21.01.09	chw
Toleranzen	Gepr.		
Material			
Halbzeug			
Oberfläche	Blatt	Blatt	Ähnlich

05.0900.0006

Rasco Dimensions Soak M.S03k