company confidential !

This drawing and the information herin is the property of RASCO and is to be used in strict confidence. This drawing shall not be reproduced, copied, or given to any third party without express written permission from RASCO.

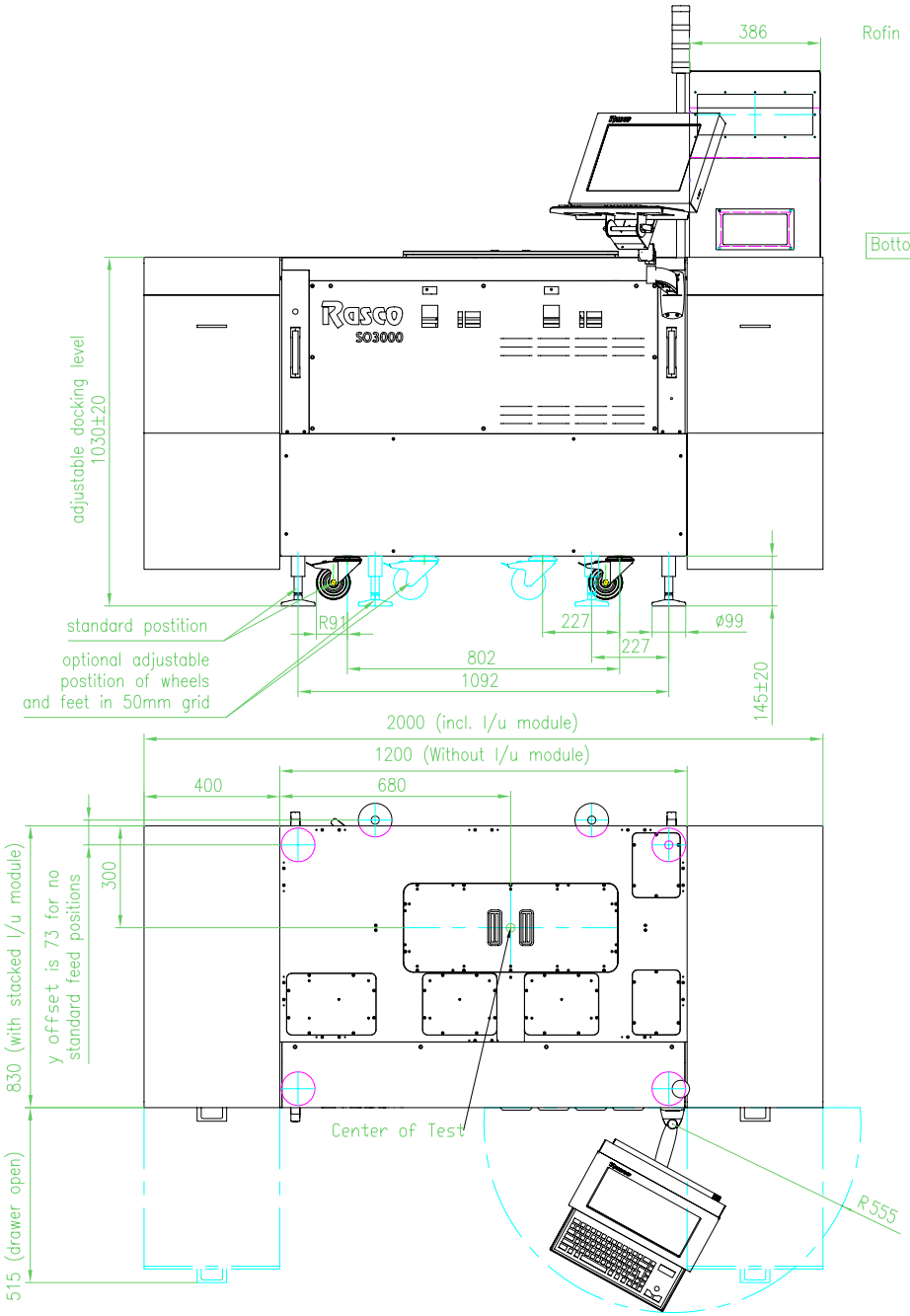

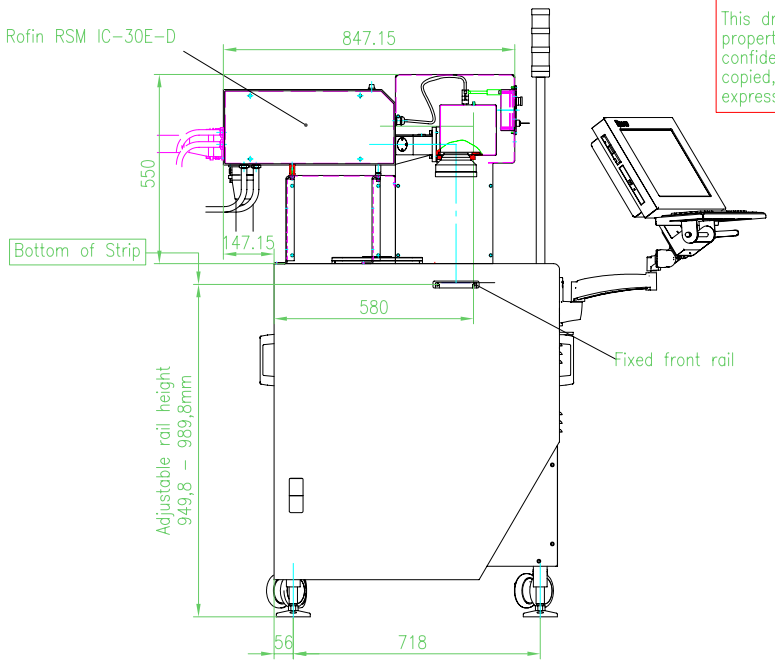

Handler footprint:
without operator interface
1,6sqm
with operator interface
2,2sqm

Dimensions for handler and stacked loader/unloader

Index	Zustand	Datum	Name	Index	Zustand	Datum	Name	Index	Zustand	Datum	Name	Index	Zustand	Datum	Name
a	was 05.0900.0003	22.11.07	dschmid												
b	only for stacked L/U	08.01.09	ceammets.												

		Datum	Name
Maßstab 15:1/20:1	Bearb.	17.11.06	dis
Toleranzen	Gepr.		
Material			
Halbzeug			
Oberfläche	Blatt	Blatt	

05.0900.0005

Rasco SO3000 Laser Marker

Ähnlich